INSTALLATION, OPERATION & MAINTENANCE MANUAL

Pulse~Pure®

EVAPCO, Inc.
World Headquarters
PO Box 1300
Westminster, MD 21158
410-756-2600
www.evapco.com

© EVAPCO, INC., 2018
All Rights Reserved

TABLE OF CONTENTS

Section **Page**

INTRODUCTION **1**
Pulse~Pure® System Overview 1
Standard Equipment and Operation 1
Additional Equipment 3
Specifications 3
PRINCIPLE OF OPERATION **4**
Pulsed Power Technology in Non-Chemical Water Treatment 4
Scale Reduction 4
Microbiological Control 4
Corrosion Control 5
ELECTRICAL CONNECTIONS **5**
Incoming Power to Pulse Panel 5
Transformer Secondary Power 6
Control and Monitoring Connections 8
Control Contact (Remote ON/OFF Switch) 8
MODBUS RTU Protocol via RS-485 8
Fault and Operate Contacts 8
Pulse~Pure® Chamber to Panel Connection 9
Pulse~Pure® Circuit Board DIP Switch and Jumper Pins 10
SYSTEM OPERATION **12**
Start-up Procedure 13
Stainless Steel Equipment 13
Galvanized Steel Equipment 13
Winterization and Shutdown Procedures 14
Winterization 14
Shutdown 14
Maintenance 14
Intermittent Operation 14
Passivation, Algae, and Legionella 15
Galvanized Steel - Passivation 15
Algae 15
Legionella 16
***PULSE*~PURE® PLUS BIOCIDE FEEDERS** **17**
Factory Installed *Pulse*~Pure® PLUS Biocide Feeder System 17
Bio-Control Feeder (BCF) 17
Field Installed *Pulse*~Pure® PLUS Biocide Feeder System 18
Field Installation Guidelines 21
GENERAL INSTALLATION RECOMMENDATIONS **27**
Conduit 27
Voltage Source 27
Wiring 27
Miscellaneous 27
TROUBLESHOOTING **28**
WARRANTY **29**
APPENDIX A: MODBUS COMMUNICATION **30**
Communications Settings 30

Digital I/O (Read Only) 31
Analog I/O (Read Only) 32
Status 32
Set Points (Read / Write) and (Read Only) 32
Downloading Data 33
APPENDIX B: SAFETY STANDARDS 35
FCC, FIFRA and UL Compliance 35
Harmonic Distortion 35
CE Compliance 35

INTRODUCTION

Thank you for your purchase of EVAPCO's *Pulse*~Pure® non-chemical water treatment system. *Pulse*~Pure® systems are constructed using the highest quality materials and workmanship. *Pulse*~Pure® systems are designed to provide years of reliable service when properly maintained.

***Pulse*~Pure® water treatment systems are provided with a one (1) year service and monitoring program. It is important to continue a regular maintenance and monitoring program in subsequent years. A system that is properly maintained will help to ensure optimal service life and operating efficiency.**

Pulse~Pure® System Overview

The *Pulse*~Pure® system is an environmentally responsible water treatment alternative that offers the following advantages over chemical treatment systems:

- Reduce or eliminate chemicals to inventory, handle, and administer
- Reduced regulatory requirements
- No chemical overfeeds/underfeeds that can degrade the integrity and efficiency of heat exchangers over time
- Potential to reduce water usage
- Peace of mind that results from using a proven non-chemical technology that requires minimal monitoring and service

Standard Equipment and Operation

The *Pulse*~Pure® system is comprised of two main components: the **Purification Chamber** (including a shielded cable) and the **Pulse Panel**. Nameplates indicating the model number, part number, and serial number are located on the **Purification Chamber** and on the side of the **Pulse Panel**. A typical *Pulse*~Pure® system is shown in **Figure 1**.

Pulse~Pure® systems have **Purification Chambers** that are designed to fit pipe sizes from 3 to 16 inches in diameter. The **Purification Chamber** has a flow-through design that does not add pressure drop to the system. The outer shell of the chamber is fire retardant, watertight, and UV resistant. These design features allow for the **Purification Chamber** to be installed indoors or outdoors either horizontally or vertically.

LED's on the purification chamber cover indicate the operating status of the system. This signal serves as a useful system check when the status lights on the **Pulse Panel** are not visible. The lights flash when the system is in "Operating" mode and turn off in "Standby" or "Fault" modes.

A multi-pin plug connects the shielded cable attached to the **Purification Chamber** to a mating receptacle on the **Pulse Panel**. The shielded cable, plug and receptacle assemblies are all weather resistant.

CAUTION: **Purification Chambers** and **Pulse Panels** MUST share the same model number in order to work properly. Connecting two components with different model numbers will result in a "Fault" indication on the panel and the *Pulse*~Pure® will not operate until remedied.

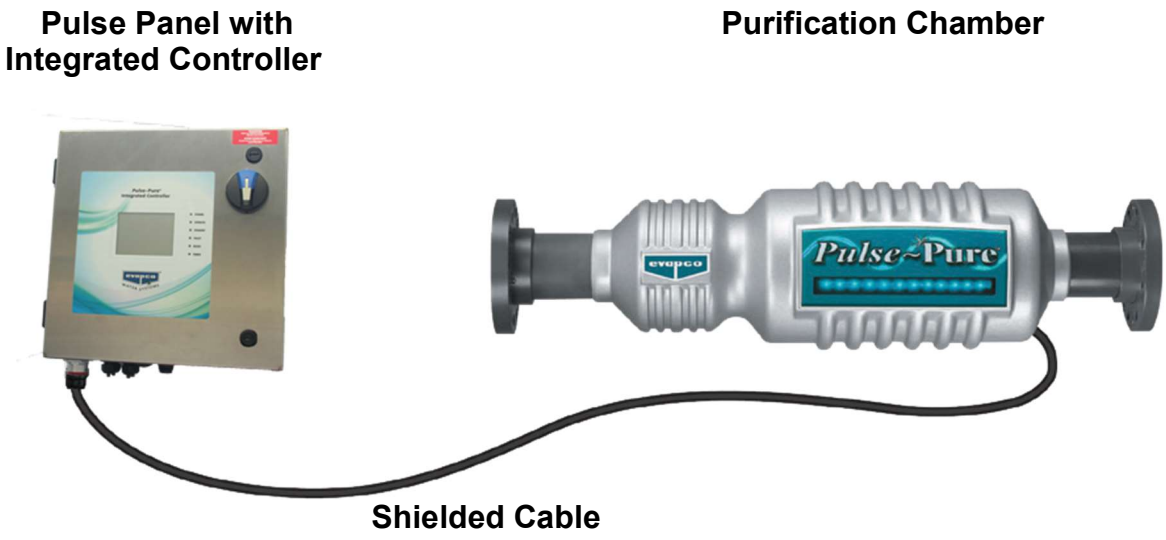

Figure 1. *Pulse*~Pure® Purification Chamber, Shielded Cable, and Pulse Panel with Integrated Controller (PPIC-2)

Standard **Pulse Panels** are NEMA 4 rated, powder coated steel enclosures. Options include a stainless steel NEMA 4X panel or stainless steel NEMA 4X integrated conductivity control panel. All models incorporate a disconnect switch on the front panel. All panels are 16"H x 16"W x 8"D. Each panel requires the supply voltage to be field wired. A single power supply line should be used for each **Pulse Panel**. Refer to the ELECTRICAL CONNECTIONS section for instructions on how to field wire the **Pulse Panel**.

There are three indicator lights on the front cover of the standard **Pulse Panel** that indicate the current state of the system: "Operating", "Fault", and "Standby." The **Pulse Panel with Integrated Controller (PPIC)** has six indicator lights on the front cover: "Power", "Operate", "Standby", "Fault", "Bleed" and "Timer". A microprocessor inside the panel continuously performs a self-diagnostic test when the panel is properly field wired and powered. The "Operating" or "Operate" light illuminates to indicate that the system is energized and operating as designed.

A signal to the *Pulse*~Pure® is required to indicate when water is flowing through the **Purification Chamber**. This signal can be generated from the Building Management System (MODBUS protocol over RS-485) or from a dry contact that is normally connected to the pump motor. This signal "tells" the *Pulse*~Pure® system to go into Operate mode when there is condenser water flow and to go into Standby mode when there is not. If pump control is used, the motor dry contact must be connected to the dry contact labeled "X1 CONTROL" located inside the panel. The "X1 CONTROL" is a dry contact ONLY; therefore, only secondary dry contacts or a jumper should be connected. Using the "X1 CONTROL" contact and MODBUS protocol are explained in more detail in the ELECTRICAL CONNECTIONS section.

Whenever the "Standby" light is illuminated, the microprocessor receives a signal that the system pump is not operating. For example, if the "X1 CONTROL" contact is connected to a secondary contact on the pump motor and the pump turns OFF, the "Operating" light will go out and the "Standby" light will illuminate.

If the microprocessor detects a fault condition, the "Fault" light turns ON. When the system pump is operating, regardless of whether the system is in a fault condition, the controller continues to check the status of the system. If the system pump turns off during a fault condition, the "Fault" light will remain ON as the "Standby" light illuminates. In "Standby" mode, the microprocessor does not run a self-diagnostic check of the system; therefore, the fault can only be cleared by remedying the problem while the system pump is ON or by cycling power to

the panel. Reference the TROUBLESHOOTING section in this manual to diagnose and remedy the cause of a fault.

Additional Equipment

The *Pulse*~Pure® system is available with a variety of conductivity control packages. These packages are integral to the effectiveness of the *Pulse*~Pure® system by ensuring that the correct condenser water conductivity is maintained. **Figure 2** shows a general arrangement of a factory installed *Pulse*~Pure® system with an integrated conductivity control package, which includes a blow down valve, and other ancillary components.

Figure 2. A typical factory installed *Pulse*~Pure® System on a closed circuit cooler or evaporative condenser

Specifications

Table 1 shows the *Pulse*~Pure® models that are available and their respective mechanical and electrical specifications for factory and field installed models. Dimensions of the **Purification Chambers** are shown along with their respective weight. When field installing a unit, the weight of the device should be properly supported as described in the FIELD INSTALLATION GUIDELINES section. Failure to properly support the unit may result in damage to the **Purification Chamber** and to adjacent pipe work and equipment.

Table 1 *Pulse*~Pure® Models and Specifications

Model	Pipe Size] [in]	Amps (120V / 230V / 460V)	Max Flow [gpm]	Max OD [in]	Length [in]	Weight [lb]	Factory Installed Cable Length [ft]	Field Installed Cable Length [ft]	Pulse Panels 120 V Weight [lb]	Pulse Panels 230 V Weight [kg]	Pulse Panels 460 V Weight [lb]
P-3	3	1.3 / 0.7 / 0.3	275	11-1/2	43-1/4	56	8	15 25 (opt.)	45	25	55
P-4	4	1.5 / 0.8 / 0.4	475	11-1/2	43-1/4	66	8	15 25 (opt.)	45	25	55
P-6	6	2.5 / 1.3 / 0.7	1,100	15	48-3/8	94	8	15 25 (opt.)	45	25	55
P-8	8	4.0 / 2.1 / 1.0	1,900	15	48-3/8	120	15	15 25 (opt.)	50	27	60
P-10	10	6.3 / 3.3 / 1.6	3,000	20-1/4	55-1/4	163	N/A	15 25 (opt.)	50	27	60
P-12	12	7.5 / 3.9/ 2.0	4,200	20-1/4	55-1/4	204	N/A	15 25 (opt.)	50	27	60
P-14	14	9.6 / 4.8 / 2.5	5,000	23	66	274	N/A	25	50	27	60
P-16	16	11.3 / 5.7 / 2.9	6,700	23	66	340	N/A	25	50	27	60

PRINCIPLE OF OPERATION

Pulsed Power Technology in Non-Chemical Water Treatment

The *Pulse*~Pure® system is based on pulsed-power technology. A pulse-powered system uses Faraday's law to induce varying electromagnetic fields in the water passing through the device. Pulsing this field creates a ringing effect, which induces similar ringing electromagnetic fields in the water. High-frequency and low-frequency coils generate these electromagnetic fields as the water flows through the **Purification Chamber**.

Scale Reduction

Pulse~Pure® technology controls the formation of mineral scale (typically Calcium Carbonate) by creating "seed crystals" from small suspended particles in the circulating cooling water. As the *Pulse*~Pure® treated water is cycled up beyond normal solubility, the calcium carbonate precipitates onto the seed crystals eventually exiting via blowdown or settling out in the basin of the evaporative equipment as non-adherent powder. The result is clean heat transfer surfaces and visibly clear condenser water.

Microbiological Control

Pulse~Pure® technology controls biological growth by two physical mechanisms: agglomeration and electroporation. Agglomeration is the mechanism where seed crystals form with calcium carbonate which trap bacteria and other small particles in the growing matrix. These trapped bacteria cannot ingest food nor reproduce and thus become inert.

Electroporation is the process of damaging the bacteria's cell wall caused by the pulsing electric fields generated in the *Pulse*~Pure® chamber. These damaged bacteria devote energy to cell repair in lieu of reproduction resulting in extremely low bacteria counts.

Both of these mechanisms of bacteria control are physical and non-species-specific; reducing their ability to mutate or adapt to defend against this physical treatment. EVAPCO guarantees that total bacteria counts will not exceed 10,000 CFU/ml in the cooling water of a properly operating *Pulse*~Pure® system.

Corrosion Control

Pulse~Pure® technology controls corrosion by operating in an alkaline environment beyond the normal saturation of calcium carbonate. These operating characteristics allow calcium carbonate to act as a natural cathodic corrosion inhibitor. Operating *Pulse*~Pure® systems typically exhibit uniform corrosion rates equivalent to many chemically treated systems. Using *Pulse*~Pure® technology, reduces the risk of aggressive localized corrosion since the need for feeding corrosive chemicals and oxidizing biocides is minimized or eliminated.

ELECTRICAL CONNECTIONS

Incoming Power to Pulse Panel

CAUTION: Follow state and local electrical regulations when wiring the *Pulse~Pure*® system.

An electrical schematic is provided with every *Pulse~Pure*® system and should be referred to before wiring the **Pulse Panel**. All **Pulse Panels** require the supply power to be field-wired. A minimum of 12-gauge wire should be used when wiring power to 120 Volt P-14 and P-16 units; for all other sizes and voltages a minimum of 14-gauge wire should be used.

All panels have an integrated disconnect switch on the panel door. For both 120 and 230 Volt systems connect the hot (line) and neutral wires to the disconnect and the ground wire to the nearby-grounding lug. **Figure 3** illustrates a disconnect wired for 120 Volt incoming power.

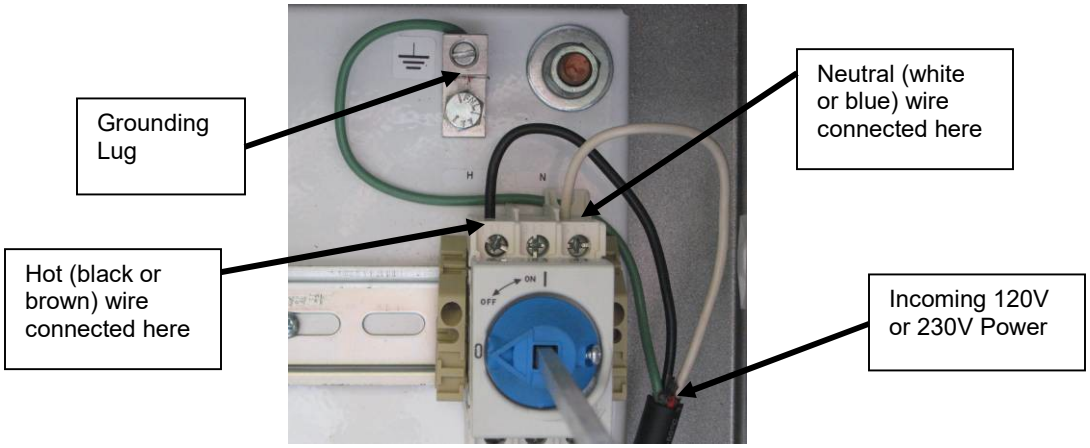

Figure 3. 120 Volt or 230 Volt Incoming Power Wired to Disconnect

The power disconnect for the 460 Volt panel has three terminals for hot lines: line 1 (L1), line 2 (L2), line 3 (L3), and a grounding lug for the ground wire (G). **Figure 4** illustrates a disconnect wired for 460 Volt incoming power.

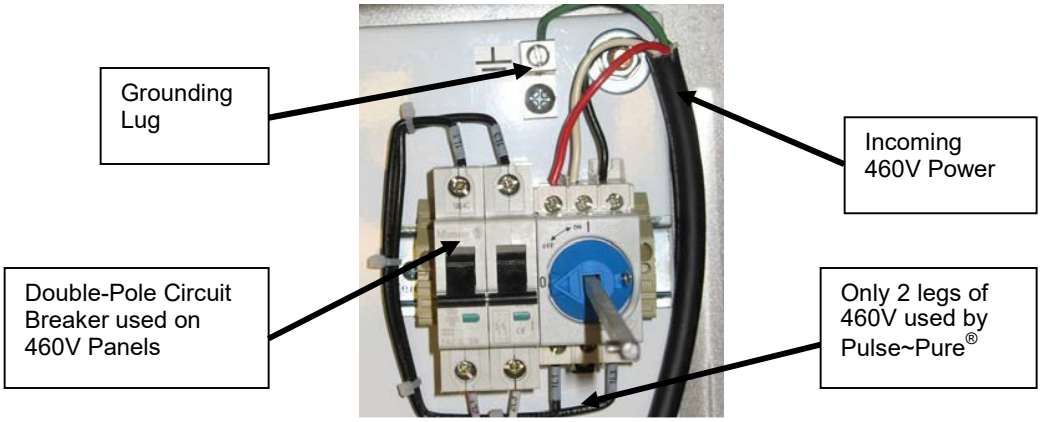

Figure 4. 460 Volt Incoming Power Wired to Disconnect
Note that only two legs are used to power the *Pulse*~Pure®

All **Pulse Panels** have a primary circuit breaker (CB). On 120 and 230 Volt panels there is a single-pole breaker located on the DIN rail. On 460 Volt panels there is a double-pole breaker located next to the disconnect switch. Table 2 details the primary CB Amp rating for all **Pulse Panels**.

Table 2 - Primary Circuit Breaker Rating

Pulse~Pure Size	Primary CB 120 V	Primary CB 230 V	Primary CB 460 V
P-3	15 A	15 A	6 A
P-4	15 A	15 A	6 A
P-6	15 A	15 A	6 A
P-8	15 A	15 A	10 A
P-10	15 A	15 A	10 A
P-12	15 A	15 A	10 A
P-14	20 A	15 A	10 A
P-16	20 A	15 A	10 A

Transformer Secondary Power

All **Pulse Panels** include a toroidal transformer with a secondary circuit that powers the **Purification Chamber**. This secondary circuit is protected by an additional circuit breaker. In all panels, regardless of primary voltage, the chamber secondary circuit breaker is located on the DIN rail and is rated for 15A for models P-3, P-4, and P-6 and 30A for P-8, P-10, P-12, P-14, and P-16. The nominal secondary voltage and current by model number for the input to circuit board is listed in Table 3. See **Figure 7** for details of measuring points.

Table 3 – Secondary Current and Voltage Input to Circuit Board

Pulse~Pure Size	Secondary Voltage Between INPUTS #1 & #2	Secondary Current to INPUTS #1 or #2
P-3	14 VAC	8.5 Amps
P-4	18 VAC	8.5 Amps
P-6	30 VAC	8.5 Amps
P-8	18.5 VAC	22 Amps
P-10	25.5 VAC	22 Amps
P-12	30 VAC	22 Amps
P-14	42 VAC	23 Amps
P-16	49 VAC	23 Amps

The DIN-rail connectors for a 120 Volt P-3 are shown in **Figure 5** below. Transformer secondary power required for system operation are connected to the DIN rail at the Secondary Circuit Breaker and the 'common'.

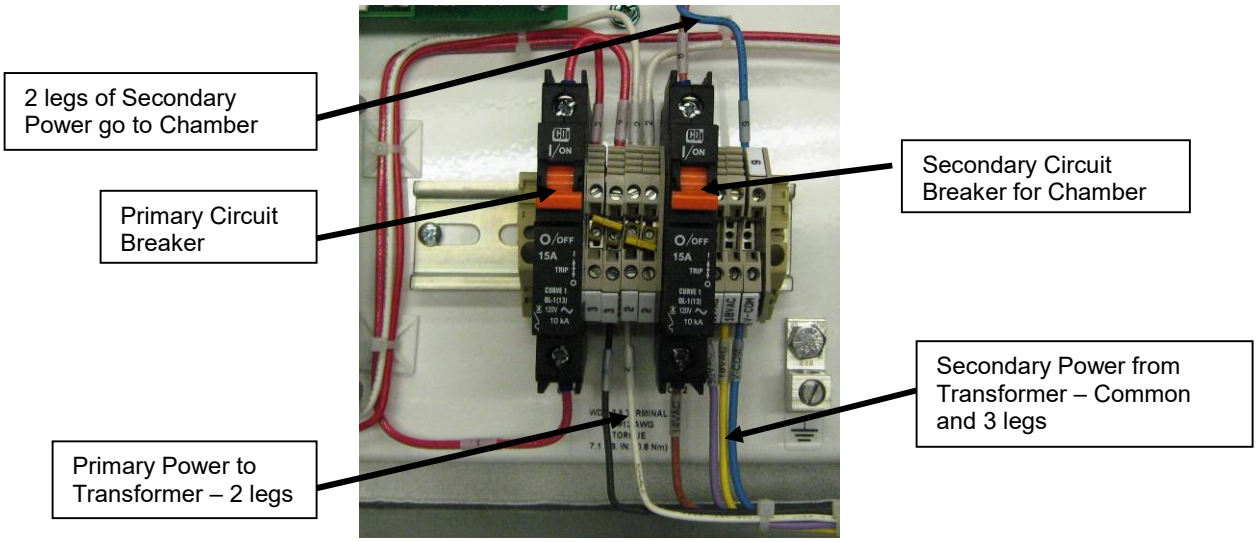

Figure 5. 120 Volt P-3 Panel DIN Rail

Transformers used in 460V panels have an auxiliary 120V output protected by a 6A circuit breaker. The 6A-120V circuit provided in the 460V panels can be used to power an external device with a maximum Amp draw less than 5A. This circuit allows for devices such as 120V conductivity controllers to be wired to the **Pulse Panel**.

A 120V device that is wired to the 120V power source in a 460V **Pulse Panel** is shown in **Figure 6** below. The 120V secondary power source terminals are located to the right of the Auxiliary 120V Circuit Breaker. A device requiring 120V service shall have the black (line or hot) wire connected to the "3" terminal, white (neutral) wire connected to the "2" terminal, and green (ground) wire connected to the grounding lug. A minimum of 14-gauge wire should be used when wiring to this power source.

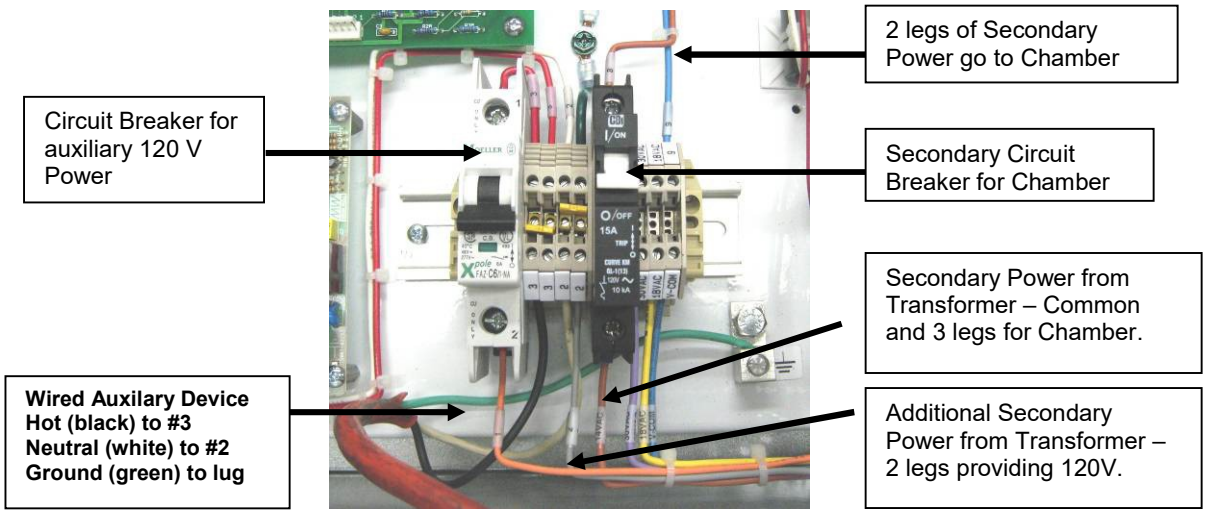

Figure 6. 460 Volt Panel DIN Rail with Auxiliary 120 Volt Connections

Control and Monitoring Connections

The *Pulse~Pure*® system incorporates wet/dry electrical contacts that allow the end user to monitor and control the system locally, remotely, or both. In addition, the built-in RS-485 communications capability, employing the industry standard MODBUS RTU protocol, allows users to connect the *Pulse~Pure*® system to their Building Management System or any compatible PLC or data acquisition device.

Control Contact (Remote ON/OFF Switch)

The connector, labeled 'X1 - CONTROL INPUT' on the circuit board, operates an ON/OFF switch on the circuit board that energizes the unit. When the X1 - CONTROL INPUT contacts are closed (completed circuit across the two terminals), coils in the **Purification Chamber** will be energized and the **Pulse Panel** will indicate that the system is in 'Operating' mode. When X1 - CONTROL INPUT continuity is interrupted (open circuit across the two terminals), the coils are de-energized, and the system goes into 'Standby' mode. Typically, a secondary contact (dry) from the circulating pump is connected to the X1 - CONTROL INPUT. When the pump is operating, the contact closes and the *Pulse*~Pure® will be energized; when the pump stops, the contact opens and the *Pulse*~Pure® goes into 'Standby' mode. For testing purposes or when the *Pulse*~Pure® will be operating 24-hours per day, the X1 - CONTROL INPUT terminals may be jumpered. For the X1 – CONTROL INPUT to operate the *Pulse*~Pure®, the middle DIP switch must be set to 'X1'. The X1 - CONTROL INPUT contact location and DIP switch location are shown in **Figure 7**.

> **CAUTION: DO NOT apply voltage to the 'X1 - CONTROL INPUT' contact as this may damage the circuit board.**

MODBUS RTU Protocol via RS-485

In order to use the MODBUS protocol to operate and monitor the *Pulse~Pure*® system, the middle DIP switch must be set to "485" and the 'X1 - CONTROL INPUT' contacts must either have a jumper wire installed or be connected to an auxiliary contact on the pump. When the middle DIP switch is set to 'X1', it is possible to monitor the system using RS-485 communication but not control the operation of the Pulse~Pure®. With the DIP switch set to 'X1', the X1 - CONTROL INPUT contact must be used to control whether the system is in 'Operating' or 'Standby' mode.

For the Modbus communication protocol to work properly, the termination character must be configured. This can be accomplished using the "JP1", which enables or disables the terminal character. The termination character is disabled when a jumper is inserted on the pins.

The RS-485 connection terminals and the 'JP1' and DIP switch are identified in **Figure 7**. Detailed information regarding the configuration of MODBUS communications settings, Digital I/O, Analog I/O, status, and set points are described in APPENDIX A: MODBUS Communication.

> **CAUTION: DO NOT run power wires and control wires in the same conduit.**

Fault and Operate Contacts

The status of the system can be monitored using the FAULT and OPERATE contacts regardless of which communication method is configured (X1 or RS-485). **Please note that 'COM' terminal is the COMMON terminal for both contacts. These Wet/Dry contacts are each protected by a 5A fuse (F1 and F2) located downstream of the COM terminal**. The state of the contacts during "Operating", "Standby", and "Fault" conditions is shown in Table 4. The location of the contacts on the circuit board is shown in **Figure 7**.

Table 4 - Configuration of the Output contacts X2 and X3

Connection		Operating	Standby	Fault
X3 - OPERATE	COM-NC	Open – LED-2 ON	Closed	Closed
	COM-NO	Closed – LED-2 ON	Open	Open
X2 - FAULT	COM-NC	Closed	Closed	Open – LED-1 ON
	COM-NO	Open	Open	Closed – LED-1 ON

The OPERATE contact, labeled 'X3 - OPERATE' on the circuit board, is a 5A fused (F2) contact that can be configured as NO or NC depending on the terminals selected. During 'Fault' or 'Standby' modes, the contacts are in their normal states. During an 'Operating' condition the coils are energized, the NO contact closes, and the NC contact opens. LED-2 indicates the status of the relay (K2) that controls this terminal. Only when the system is in 'Operating' condition will LED-2 be on.

The FAULT contact, labeled 'X2 - FAULT' on the circuit board, is a 5A fused (F1) contact that can be configured as normally open (NO) or normally closed (NC) depending on the terminals selected. During 'Operating' or 'Standby' modes, the contacts are in their normal states. During a 'Fault' condition, the NO contact closes and the NC contact opens. LED-1 indicates the status of the relay (K1) that controls this terminal. Only when the system is in 'Fault' condition will LED-1 be on.

Pulse~Pure® Chamber to Panel Connection

The chamber to panel connector on P-3 to P-12 units is a multi-pin, waterproof Deutsch plug. Because of the number of pins, this connector requires careful alignment when making a connection.

1) Align mark on male plug on cable with flat area on panel-mounted female plug.

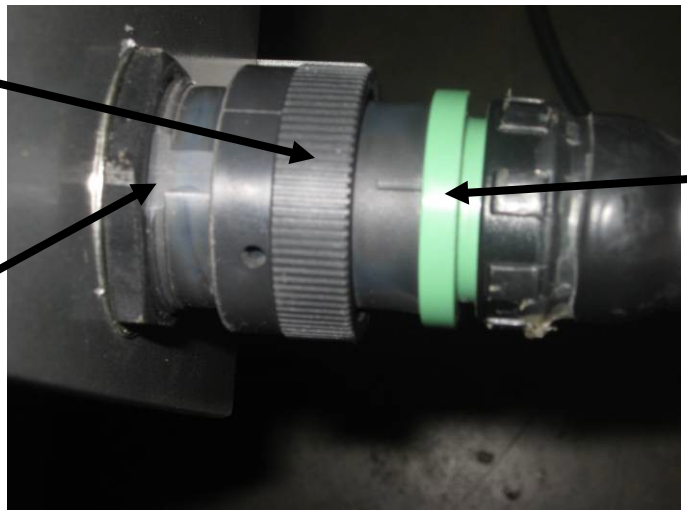

2) Tighten cable connection by turning locking ring to the right a full quarter turn after the connector engages. The plug will lock in place. Be careful to keep the cable square with the panel-plug while tightening.

Pulse~Pure® Circuit Board DIP Switch and Jumper Pins

The *Pulse*~Pure® circuit board can be configured for various sized units and operating modes by DIP switches and Jumper Pins. **Figure 7** illustrates the location of the various components. Table 5 details the functions for the various switches and JP-1.

Table 5 – DIP Switch and Jumper Settings

Pin Identification	Function
JP-1	Terminal Character for MODBUS. Disabled when jumpered.
DIP Switch LEFT	**HI / LO** – Power setting for HF coils. Default setting is **LO.**
DIP Switch MIDDLE	**485 / X1** – remote start control options. Default setting is **X1**.
DIP Switch RIGHT	**23A / 9A** – Set to **9A** for P-3, P-4, and P-6 units. Set to **23A** for P-8, P-10, P-12, P-14, and P-16 units.

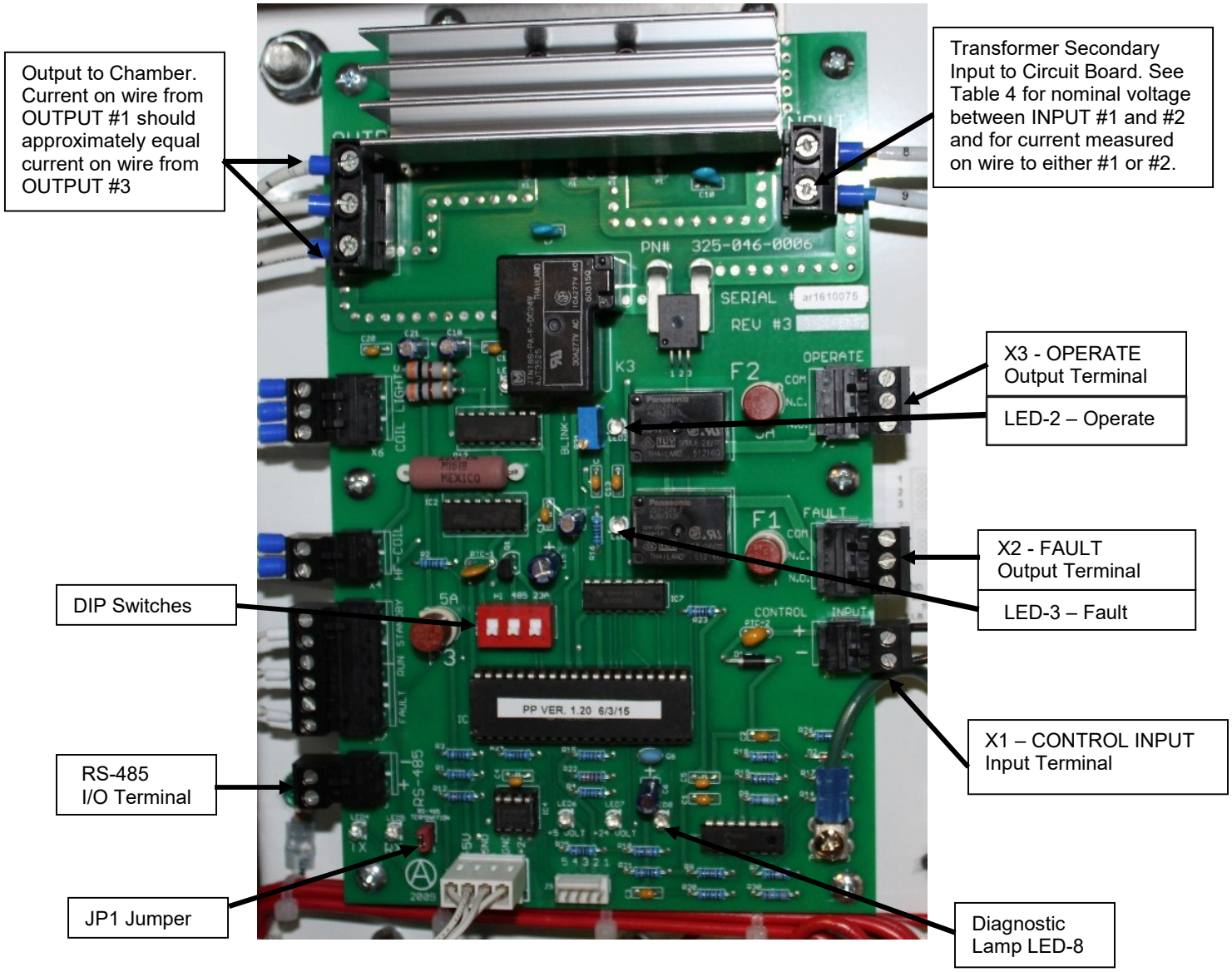

Figure 7. Pulse~Pure® Circuit Board

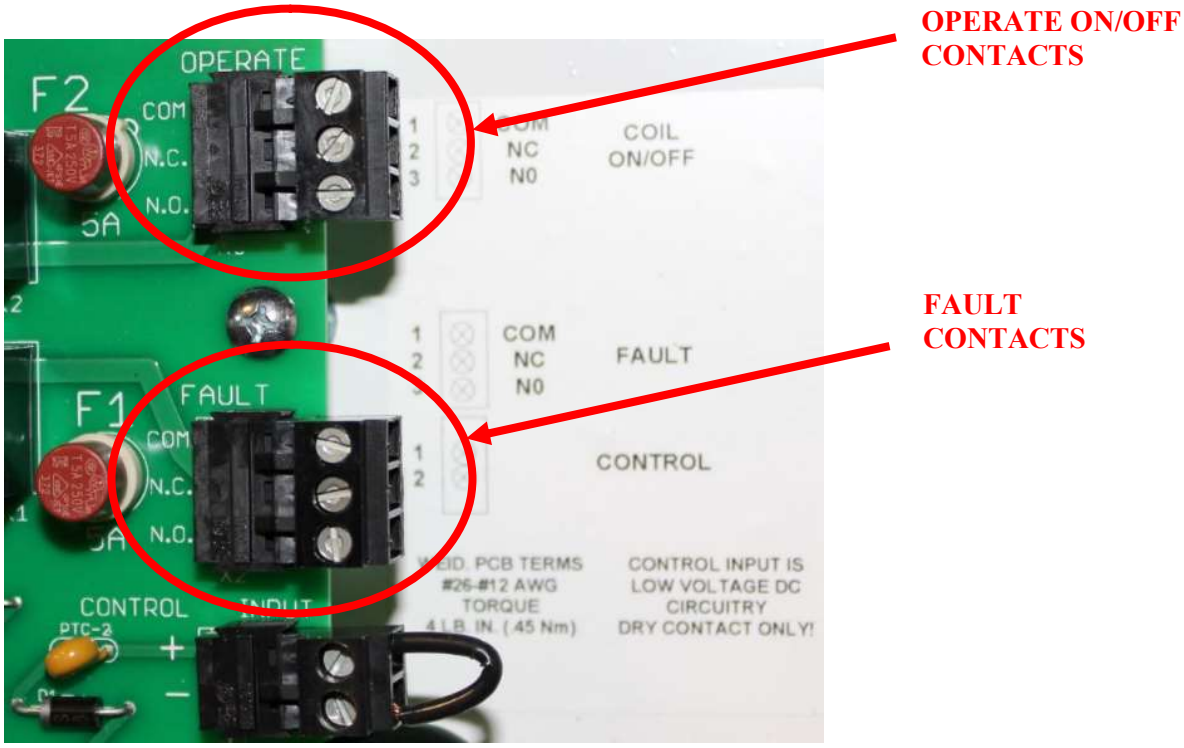

Figure 8. User connections in the Pulse Panel for monitoring coil operation and fault conditions.

SYSTEM OPERATION

The *Pulse*~Pure® system is designed to provide years of reliable operation given that it is properly installed and maintained. The guidelines given below describe the proper start-up procedure and suggested maintenance items and schedules.

Once the unit is installed and the evaporative cooling unit is operating normally, it is important that the *Pulse*~Pure® operates with condenser water flow until the conductivity set point is reached. The *Pulse*~Pure® unit should be operated such that the system volume is passed through the unit at least twice a day. This will help to ensure that microbial populations are not flourishing in the system. Water should be circulated daily through ALL condenser/spray water piping including plate/frame heat exchangers, lead and lag chillers.

For evaporative cooling systems which have been idle for more than a few days and not drained, it is important that the system is started with only the pump and *Pulse*~Pure® operating. The system should operate in this mode for a period of time before the fans are turned ON. Microbial populations thrive in inactive water systems and this method of start-up reduces the chance that they will be transported out of the system via drift. If the biological condition of the system is unknown, microbial tests should be conducted at intervals during this procedure to determine when biological levels stabilize.

An important aspect of *Pulse*~Pure® system operation is to frequently monitor the status lights on the **Pulse Panel** as well as those of the purification chamber. This is especially important if the fault outputs on the *Pulse*~Pure® system are not communicated to the building management system. Ignoring the system's fault light may result in problems operating the evaporative cooling system, high biological levels, corrosion, and/or heat exchanger fouling.

Start-up Procedure

To help ensure that the *Pulse*~Pure® system operates consistently for years, it is important to follow the proper start-up procedure and to routinely monitor the system thereafter. An EVAPCO Factory Authorized Water Treatment Partner shall be onsite during *Pulse*~Pure® system start-up. For *Pulse*~Pure® systems that are installed on new evaporative cooling units, the start-up procedure can vary depending on whether the evaporative cooling unit includes galvanized steel or stainless steel materials of construction.

Prior to start-up, all new evaporative cooling unit equipment needs to be properly cleaned and flushed to remove any dirt or debris from construction, and residual oil from the system. Evaporative cooling equipment constructed of galvanized steel may require an additional conditioning period explained below.

CAUTION:	**Proper safety measures should be followed when entering evaporative cooling equipment. Refer to OSHA guidelines.**

Stainless Steel Equipment

The start-up procedure for a *Pulse*~Pure® system on an all stainless steel evaporative cooling unit consists of the following items:

1. Verify that the *Pulse*~Pure® is properly installed according to EVAPCO installation guidelines.
2. When (1) is satisfied and *Pulse*~Pure® is field installed, weep holes will be drilled into the **Purification Chamber** shell. See EVAPCO Field Assembly Procedures for information.

3. Confirm that the system has been cleaned, flushed and filled with fresh water.
4. Verify the supply voltage.
5. Verify that all lights, on the **Pulse Panel** and **Purification Chamber**, are working properly. The "Operating" light should illuminate when the system pump is ON and the "Standby" light should illuminate when the pump turns off. Refer to CONTROL AND MONITORING CONNECTIONS section.
6. Check that the conductivity probe is cleaned and calibrated. See the Operations & Maintenance manual for the specific conductivity controller supplied.
7. Ensure there is water flow through the **Purification Chamber** and past the conductivity probe. This can be accomplished by observing the spray system and opening the sample port in the recirculation line.
8. Make certain that the blowdown setpoint is set as per jobsite PPF 1.0 and then check that the conductivity probe activates the blowdown valve when conductivity is higher than the set point.

Galvanized Equipment

The start-up procedure for a *Pulse*~Pure® system on a new galvanized steel evaporative cooling unit consists of the following items:

1. Items 1 through 8 above using the EVAPCO selected cycles of concentration as indicated on PPF 1.0 for no load passivation or per the site's written passivation plan.
2. Five to ten weeks of conditioning the galvanized steel surfaces by circulating water through system at a pH between 7.0 and 8.0. For more information, see the PASSIVATION section (pg.15).
3. Once the passivation process is completed, gradually increase (over the next 2 or 3 site visits) the set point of the conductivity controller from the passivation set point up to the operating cycles provided by EVAPCO in the PPF 1.0.
4. EVAPCO does not recommend the use of 100% softened water with any galvanized equipment.

Winterization and Shutdown Procedures

Proper winterization and shutdown procedures should be followed for evaporative cooling equipment and the *Pulse*~Pure® system.

Winterization

If the *Pulse*~Pure system is subject to freezing conditions, it is necessary to properly heat trace all ancillary *Pulse*~Pure components that may contain water, specifically those components in the conductivity control loop. The Purification Chamber does not have to be heat traced or insulated, however pipework above and below the Purification Chamber should be heat traced and insulated. **NOTE: The motorized ball valve must be heat traced or otherwise positively drained.** Failure to properly heat trace these components can lead to damage to pipes, valves and other components in the system.

Shutdown

During periods where the evaporative cooling system is shutdown (winter, repair, etc.) and the system is NOT drained, it is important to cycle the water volume of the system through the *Pulse*~Pure® system at least twice per day. This will ensure that microbial activity is controlled over the shutdown period.

For remote sump systems that have been shutdown for the winter, but are not drained, a bypass loop containing a *Pulse*~Pure® system could be used to allow for the system's water volume to be turned over without the threat of a pipe freezing.

Maintenance

In addition to properly starting-up the *Pulse*~Pure® system, following a routine maintenance schedule will ensure that the system operates at maximum efficiency and achieves a long service life. Establishing a service contract with an EVAPCO Factory Authorized Water Treatment Partner will help to guarantee that your system is thoroughly monitored and serviced at regular intervals.

Intermittent Operation

Intermittent operation and/or stagnant water can cause operational problems for both chemically and non-chemically treated systems. Stagnant water can foster differential oxidation cells to develop, resulting in localized corrosion attack. Because of the way that chillers are constructed (roll bonded copper tubes to a steel tube-sheet) there is an inherent galvanic couple at the end of the tubes. Stagnant water will enhance the corrosion attack on the steel and scaling on the copper tube (due to the high pH of the cathodic half-cell). Microbiological growth can also flourish in stagnant systems.

Idle systems should be drained from a low point in the system and stored dry. If dry storage is not possible, flow should be circulated through any idle equipment several times each week. A minimum velocity of 3.5 to 4.0 feet/second is recommended to reduce deposition potential. For idle systems that cannot be stored dry and cannot receive intermittent flow weekly, lay-up products may be required.

Passivation, Algae, and Legionella

Galvanized Steel – Passivation

The initial commissioning and passivation period is a critical time for maximizing the service life of galvanized equipment. EVAPCO recommends that the site-specific water treatment plan includes a passivation procedure which details water chemistry, any necessary chemical addition, and visual inspections during the first five (5) to ten (10) weeks of operation. Heat load can increase the potential for white rust formation during the initial passivation period. New galvanized equipment should be run without load for as much of the passivation period as is practical.

The following water chemistry promotes the formation of white rust and should be avoided during the passivation period:

1. pH values in the recirculating water greater than 8.3.
2. Calcium hardness (as $CaCO_3$) less than 50 ppm in the recirculating water.
3. Anions of chlorides or sulfates greater than 250 ppm in the recirculating water.
4. Alkalinity greater than 300 ppm in the recirculating water regardless of pH value.

Changes in water chemistry control may be considered after the passivation process is complete as evidenced by the galvanized surfaces taking on a dull gray color. Any changes to the treatment program or control limits should be made slowly, in stages while documenting the impact of the changes on the passivated zinc surfaces.

- Operating galvanized evaporative cooling equipment with a water pH below 6.0 for any period may cause removal of the protective zinc coating.
- Operating galvanized evaporative cooling equipment with a water pH above 9.0 for any period may destabilize the passivated surface and create white rust.
- Re-passivation may be required at any time in the service life of the equipment if an upset condition occurs which destabilizes the passivated zinc surface.

For more information on passivation and white rust, please request a copy of EVAPCO's Engineering Bulletin 36A from your EVAPCO representative.

Algae

Algae are plants that require sunlight and minerals to grow. In evaporative cooling equipment, ambient airborne dirt and nutrients that are drawn into the equipment and then scrubbed into the cooling water can help promote algae growth. The presence of algae is not an indication of biological activity although it is normally considered aesthetically undesirable in evaporative cooling equipment. The *Pulse*~Pure® water treatment technology will control bacteria within industry guidelines but it may not control algae growth. Low bacteria counts are a validation that *Pulse*~Pure® is working properly and controlling biological growth regardless of whether algae is present.

The most effective algae reduction solution is to eliminate sunlight exposure to the cooling water. EVAPCO has designed specific mechanisms to prevent sunlight exposure to the cooling water in the design of its evaporative cooling equipment. Although a slight amount of algae may form on equipment exterior splash areas, **EVAPCO's counterflow equipment designs virtually eliminate heavy algae growth** on the inside of the equipment due to the absence of direct sunlight on the circulating cooling water. Conversely, **crossflow units are inherently prone to algae growth** because their design allows direct sunlight exposure onto the cooling water.

If a *Pulse*~Pure® water treatment device is to be installed on crossflow evaporative cooling equipment, the purchaser and operator should be aware that the presence of algae may occur on wet areas that are exposed to sunlight. For more information on crossflow evaporative cooling equipment and algae, please request a copy of EVAPCO's *Pulse*~Pure® Technical Bulletin 4 from your EVAPCO representative.

Legionella

Legionella bacteria can be present in most raw water supplies. Human exposure and subsequent infection is based on several concurrent factors. Drift that can emit from evaporative cooling equipment may provide a mode of transportation of Legionella bacteria to humans. Entrained in the drift, the bacteria may make its way into a human host. Although, at this point, infection still is dependent on various factors such as the host's immune system, the level of contamination, and the virulence of the bacteria.

The *Pulse*~Pure® system does not kill bacteria; instead bacteria such as Legionella are controlled by limiting their reproduction. The result of this approach is a system with a low microbial population and biological activity, which **may** help reduce the potential for Legionella infection. EVAPCO makes no claims, through the use of the *Pulse*~Pure® system, to eliminate the presence of Legionella in water or control the potential risk factors for human infection.

There are many effective practices that should be followed to reduce the potential for Legionella infection. For more information, see ANSI/ASHRAE Standard 188-2015, "Legionellosis: Risk Management for Building Water Systems".

PULSE~PURE® PLUS FEEDERS

Pulse~Pure® PLUS systems add a supplemental chemical feeder to provide a reduced chemical treatment system. Supplemental feeders can be combined with a *Pulse*~Pure® to meet local regulations or local water quality.

Factory Installed *Pulse*~Pure® PLUS System

Figure 9. **Factory Installed *Pulse*~Pure® PLUS System**

Bio-Control Feeder (BCF)

Closed circuit coolers or evaporative condensers which include a factory mounted *Pulse*~Pure® can be supplied with a supplemental biocide feeder called a **Bio-Control Feeder** (**BCF)**. The **BCF** is engineered to release a solid biocide into the spray water of a fluid cooler or evaporative condenser. Recirculating water will pass through the **BCF** and return to the basin whenever the spray water pump is in operation; except when the system is in the blow down mode – then the **BCF** is bypassed and the water will flow through the sanitary drain line. When the spray pump is de-energized water drains by gravity out of the **BCF**, and the associated piping, preventing freezing concerns in most locations.

NOTE: Discharge water (blowdown and overflow) from all chemically-treated cooling systems (including systems using EVAPCO *Pulse*~Pure® PLUS) must comply with local discharge regulations. This usually requires that the overflow and discharge from all treated evaporative cooling systems be piped to the sanitary sewer. Check local sewer and discharge regulations before operating the evaporative cooling system with EVAPCO *Pulse*~Pure® PLUS

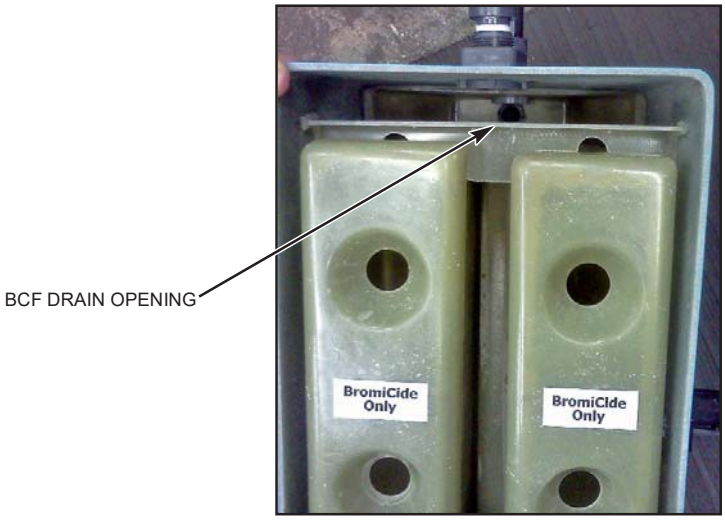

Figure 10. BCF Drain Opening Location

NOTE: The **BCF** drain opening should be inspected monthly and cleaned as required to maintain proper draining of the **BCF**.

Storage

Replenishment biocide should be stored in a cool dry area away from direct sunlight. Biocide packages have a storage life of 12 months from the shipment or 18-months from the date of manufacturing, whichever is less.

Periodic Testing

Periodic testing by an EVAPCO Factory Authorized Water Treatment Partner must be performed to verify that the system is performing as designed and to adjust the quantity of chambers filled based on changes in load, ambient conditions, make-up water quality or other local conditions.

Individual **BCF** baskets which contain biocide should be inspected monthly to assure that the product has not bridged at the waterline.

Field Installed (Open Cooling Tower or Remote Sump Applications) *Pulse*~Pure® PLUS System

Installation of Feeder

Supplemental chemical feeders for open tower applications are designed to be installed in a mechanical room. Before installation, consider the location of the recirculating water's supply and return taps in the system piping headers. Each header tap should include an isolation valve at the header and be installed on the side of the pipe (See **Figure 11**). Also consider the sanitary drain location. Drain piping should provide for gravity flow.

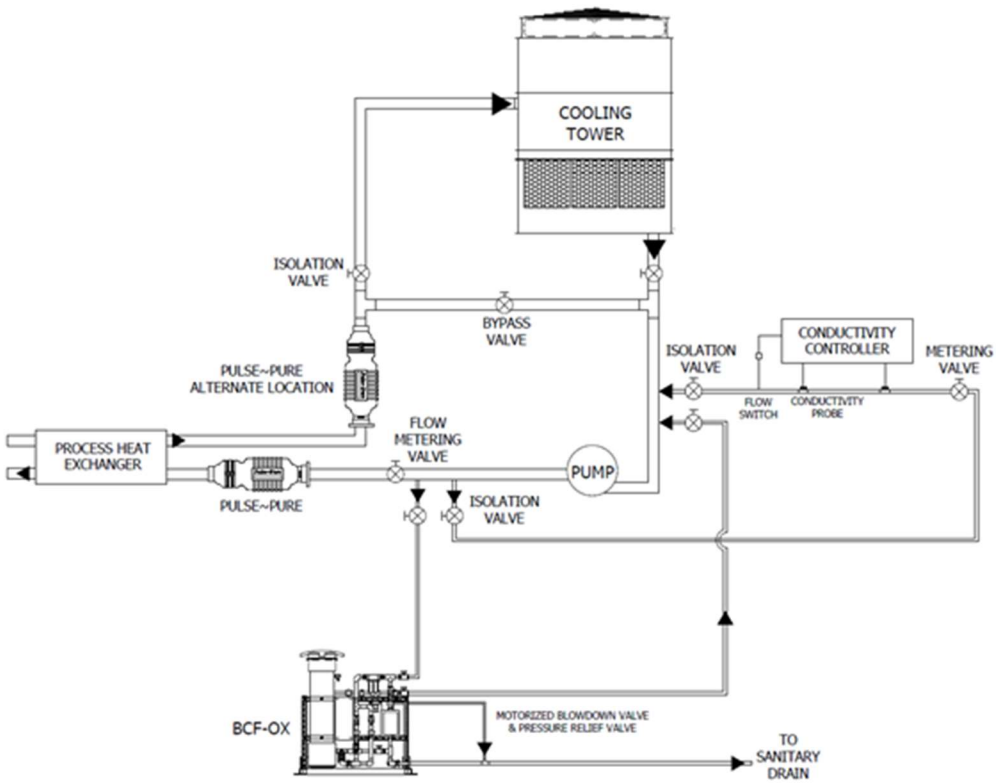

Figure 11. General field installed arrangement of the Pulse~Pure® PLUS in a system with a Single Cooling Tower with Integral Sump.

Pipe supply water to the supplemental chemical feeder from the high pressure (pump discharge) side of the system, upstream of metering valves and process heat exchangers. Supply piping shall be 3/4" (25 mm) or 1" (32 mm) schedule 80 (PN16) PVC. Pipe return water from the feeder to the low pressure (pump suction) side of the system pump or to the remote sump. Each 1" header tap shall include an isolation valve at the header (supplied by others) and be installed on the side of the pipe. If you have any questions, consult your EVAPCO Representative or Factory Authorized Water Treatment Partner.

Pipe the 3/4" (25 mm) or 1" (32 mm) feeder drain/bleed connection to sanitary drain using hard pipe, allowing for gravity flow. Connect the pressure relief valve to the sanitary drain noted above. Pressure relief valve is fixed at 125 psi (860 kPa). Field wire the feeder Solenoid (18 GA) and the blow down valve (18 GA) to the conductivity controller. Refer to wiring diagrams provided in submittal or controller IO&M for details.

Loading the Feeder

Read all posted labels and placards prior to opening this feeder. Contact your EVAPCO Representative or Factory Authorized Water Treatment Partner prior to opening feeder.

It is important to flush dissolved chemistry from the feeder back into the recirculating water prior to loading. Use the controller's (R6 - Hand-ON) control feature to energize the Solenoid Valve

Relay. Flush the feeder for approximately 3 minutes then ensure the relay is back in automatic operation (R6 - AUTO).

CAUTION: Failure to flush feeder before opening may increase potential for vapor release or other hazards.

Close the Supply and Return Isolation Valves on the feeder system. See **Figure 12**. Open the feeder Drain Valve and then the Vent to drain the feeder to sanitary drain. Note that it may not be necessary to completely drain the feeder for reloading. Once feeder is drained, close the Drain Valve and then open the feeder by rotating counter-clockwise to remove lid. Add the required amount of chemistry to the feeder. **DO NOT** overload feeder. Inspect the lid to ensure O-ring is present, lubricate as needed using non-petroleum based lubricant, and replace the lid. The lid should be secured hand tight. **DO NOT** use tools to tighten. **DO NOT** over tighten.

Open the Return and then Supply Isolation Valves. Use the controller to set the feeder Solenoid Valve Relay into (R6 - Hand-ON). Allow air to bleed from the feeder with the Vent open. Once air has bled, close the Vent. Ensure the flow meter is registering proper flow and confirm the feeder Solenoid Valve Relay is back in automatic operation (R6 - AUTO).

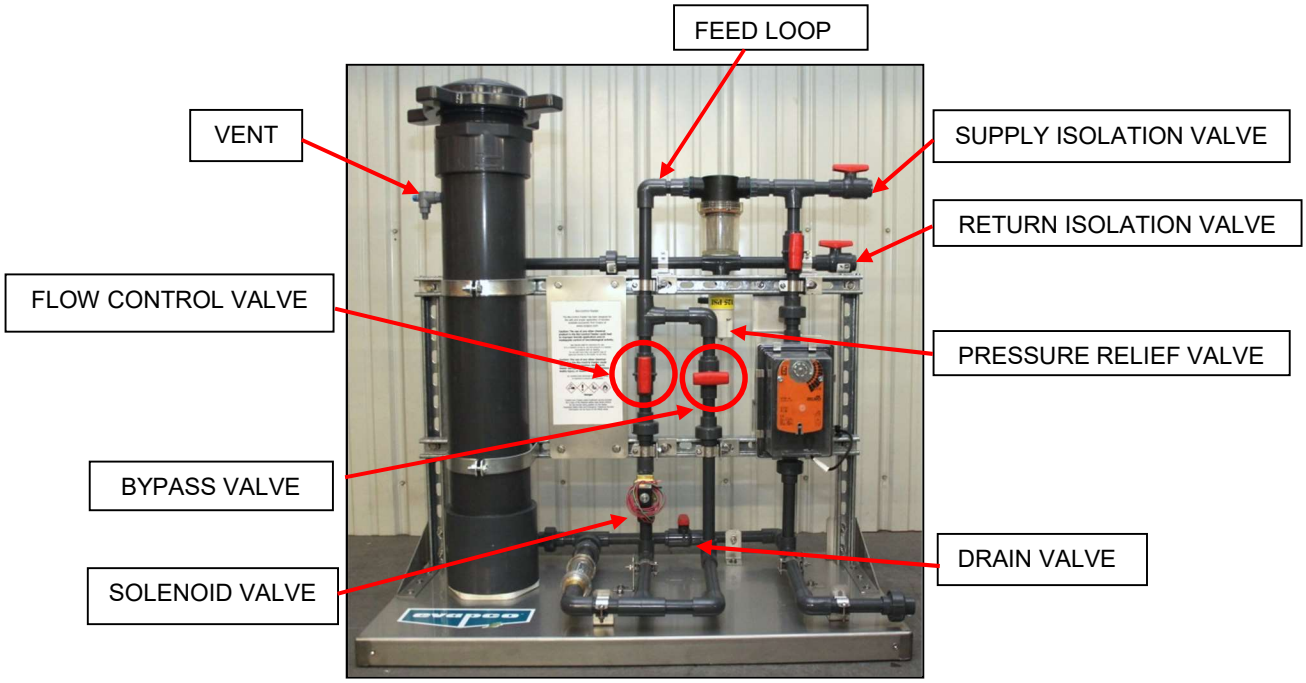

Figure 12. Loading the Feeder

Replenishment Chemistry

Contact your EVAPCO Representative or Factory Authorized Water Treatment Partner for the type and amount of chemistry to be loaded into your system. Refer to the feeder label and the chemistry Safety Data Sheet (SDS) prior to use.

Periodic Testing

CAUTION: The use of any other chemical product in the feeder could cause a chemical reaction resulting in feeder damage, property damage, serious bodily injury, or death.

Periodic testing by an EVAPCO Representative or Factory Authorized Water Treatment Partner must be performed to verify that the system is operating as designed and to adjust the feed timer duration or flow and chemistry amount based on changes in system load, ambient conditions, make-up water quality, or other local conditions.

FIELD INSTALLATION GUIDELINES

Pulse~Pure® systems are easily field installed on evaporative cooling systems. The chamber can be located indoors or outdoors and oriented in any direction of flow.

EVAPCO Technical Field Instructions (TFI-WS-10 and TFI-WS-11) should be referenced for specific field installation instructions. TFI-WS-10 covers the field installation of *Pulse*~Pure® systems on closed circuit coolers or evaporative condensers without remote sumps. TFI-WS-11 covers the field installation of *Pulse*~Pure® systems on all open cooling towers and remote sump applications.

CAUTION: Follow proper industry rigging procedures when installing the *Pulse*~Pure® Purification Chamber. Purification chambers are heavy and improper handling of the device may result in damage to the chamber, damage to surrounding equipment, or injury.

Several standard installations are discussed below. For special installations not covered in this manual, please consult your local EVAPCO representative or EVAPCO Water Systems. Some general installation guidelines are:

1. The **Purification Chamber** shall be mounted either between the system pump discharge and the inlet to the heat exchange equipment or between the outlet of the heat exchange equipment and inlet to the evaporative cooling unit.
2. The **Purification Chamber** does not have a specific flow direction. It should be mounted in an orientation which minimizes stress on or bending of the shielded cable.
3. Sidestream piping for conductivity probe manifold should be supplied from the high pressure side of the system (after pump) and should return to either the system sump or a low pressure side of the pump. Please note that the conductivity sidestream line requires only a small amount of flow. This ensures that the conductivity probe sees a representative sample of the circulating water.
4. Blowdown valves operated by a conductivity controller should be located in the high pressure side of the system (after pump and side stream piping for conductivity measurement) terminating in the drainage line.
5. If it is necessary to install the **Purification Chamber** on a riser pipe above the water level when the pump is not operating, the *Pulse*~Pure® should be configured to go in to "Standby" mode when the pump turns off. This will prevent the coils on the **Purification Chamber** from operating, and unnecessarily running warm, when there is not flow through the device. The "X-1 CONTROL INPUT" or RS-485 protocol can be used to switch the device from "Operating" mode to "Standby". Both are described in the ELECTRICAL CONNECTIONS section.
6. Pipe work attached to the **Purification Chamber** should be adequately supported with brackets, hangers or both. These supports should be installed in accordance with local building and plumbing codes. When installing the **Purification Chamber** into a steel pipe system, the system pipe must be firmly anchored to eliminate stress on the **Purification Chamber.** If steel pipe work is not properly supported, the weight of the pipe in addition to torsional loads on the chamber may result in damage to the chamber.
7. It is recommended that additional supports are located on the bare PVC pipe midway between the flange and fiberglass body on both ends of the unit. Additional supports, brackets or hangers, should be added regardless of the orientation of the chamber to relieve the **Purification Chamber** of external stresses. Figure 20 indicates the suggested location of these supports for a horizontally mounted chamber.
8. The Final step in the installation of the **Purification Chamber** is to drill 3/16" weep holes in the chamber housing. These will allow for the drainage of any condensate build-up that may occur. Refer to the appropriate EVAPCO *Pulse*~Pure® TFI for the proper location and quantity of weep holes.

Figure 20. Recommended support locations for a horizontally mounted Purification Chamber

Flanged Connections

Pulse~Pure **Purification Chamber** flanges are rated for a maximum pressure of 150 psi. Piping runs must be installed in a straight line to avoid stress at the flange due to misalignment. Be sure that the faces of the mating surfaces of the flanges are flush against the gasket. Use two flat washers with each bolt. Tighten bolts by hand until snug. Bolts should be tightened in a 180° opposing pattern in 5 ft-lb (7 N-m) increments until the recommended torque is reached. The recommended bolt torque and tightening sequence is shown in Table 6.

CAUTION: Do not over torque bolts as this may damage flange.

Table 6 – Flange Torque Sequence

Chamber Size	Number of Bolts	Bolt Size	Recommended Torque ft-lbs (Newton-meter)	Torque Sequence
P-3	4	5/8”	25 ft-lbs (34 N-m)	
P-4	8	5/8”	25 ft-lbs (34 N-m)	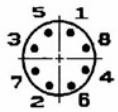
P-6	8	3/4"	40 ft-lbs (54 N-m)	
P-8	8	3/4"	40 ft-lbs (54 N-m)	
P-10	12	7/8”	64 ft-lbs (87 N-m)	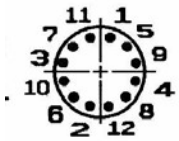
P-12	12	7/8”	95 ft-lbs (129 N-m)	
P-14	12	1”	110 ft-lbs (149 N-m)	
P-16	16	1”	110 ft-lbs (149 N-m)	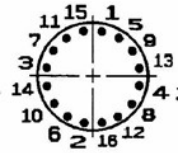

The recommended gasket for all flanges is a full-faced, 1/8” (3 mm) thick elastomer gasket with a Shore “A” Durometer of approximately 70.

Field Installation of Pulse Panel

The **Pulse Panel** may be mounted on any flat surface that is within reach of the **Purification Chamber** cable (15' standard length). If mounting the **Pulse Panel** on an area of the evaporative cooling unit in which water will come into contact with mounting hardware, it is necessary to properly seal the interior hardware. Figure 21 displays **Pulse Panel**s for 120V, 230V and 460V service and the mounting hole locations.

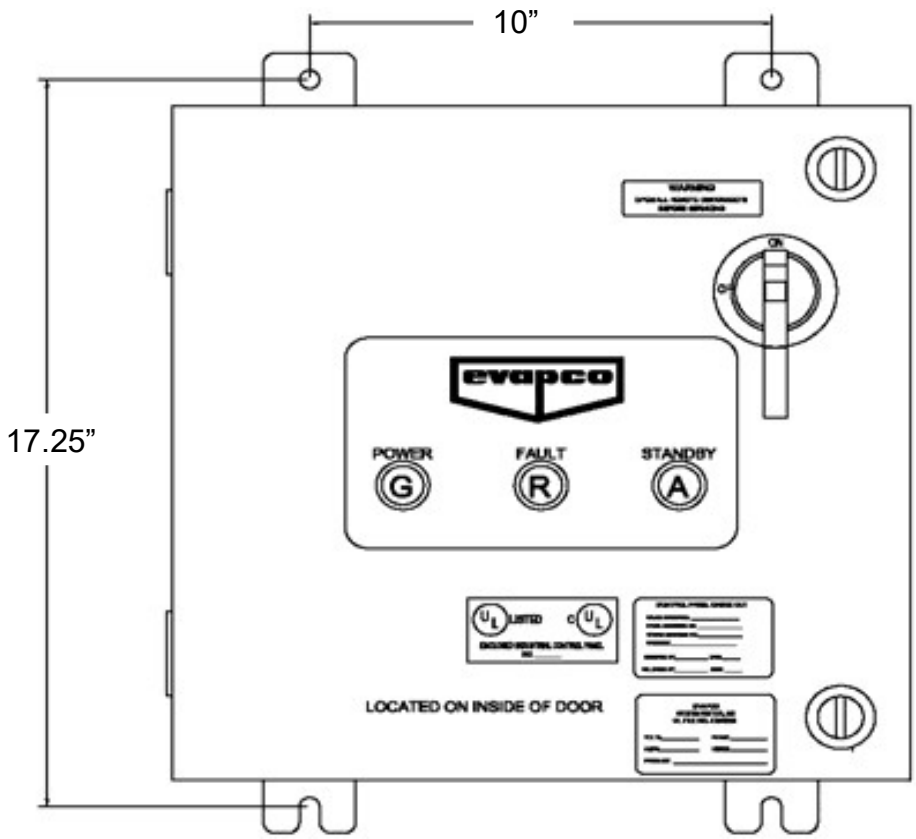

Figure 21. Standard Field Installed Pulse Panel

Installations Involving a Single Evaporative Cooling Unit

A schematic of a field installed *Pulse*~Pure® system in a system that includes an evaporative cooling unit with an integral basin and a process heat exchanger is shown in **Figure 22**. In this particular system the **Purification Chamber** should be located downstream of the pump, on either side of the process heat exchanger. During the winter, evaporative cooling units in this arrangement that reside outside on a roof may be drained down below the roof line so that pipes do not freeze. For these situations, if the complete system cannot be drained, it is recommended to open the bypass valve and circulate the water through the *Pulse*~Pure® for a period long enough to turn the system volume over at least twice a day. This will maintain control of biological activity.

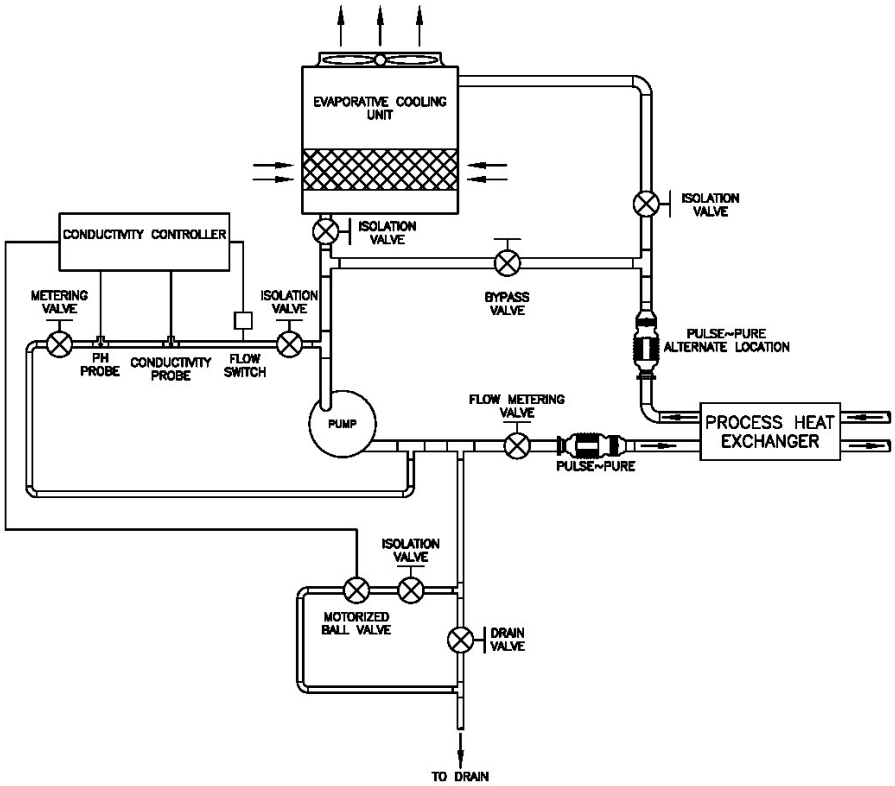

Figure 22. General field installed arrangement of the *Pulse*~Pure® system in a system with a single evaporative cooling unit with integral basin.

The system illustrated in **Figure 23** is the same as shown in **Figure 22** with the exception that it depicts a remote sump application. In a remote sump application, the **Purification Chamber** can also be installed before or after the process heat exchanger. As previously stated, during dormant winter operation, the bypass valve should be opened and water should be circulated through the *Pulse*~Pure®.

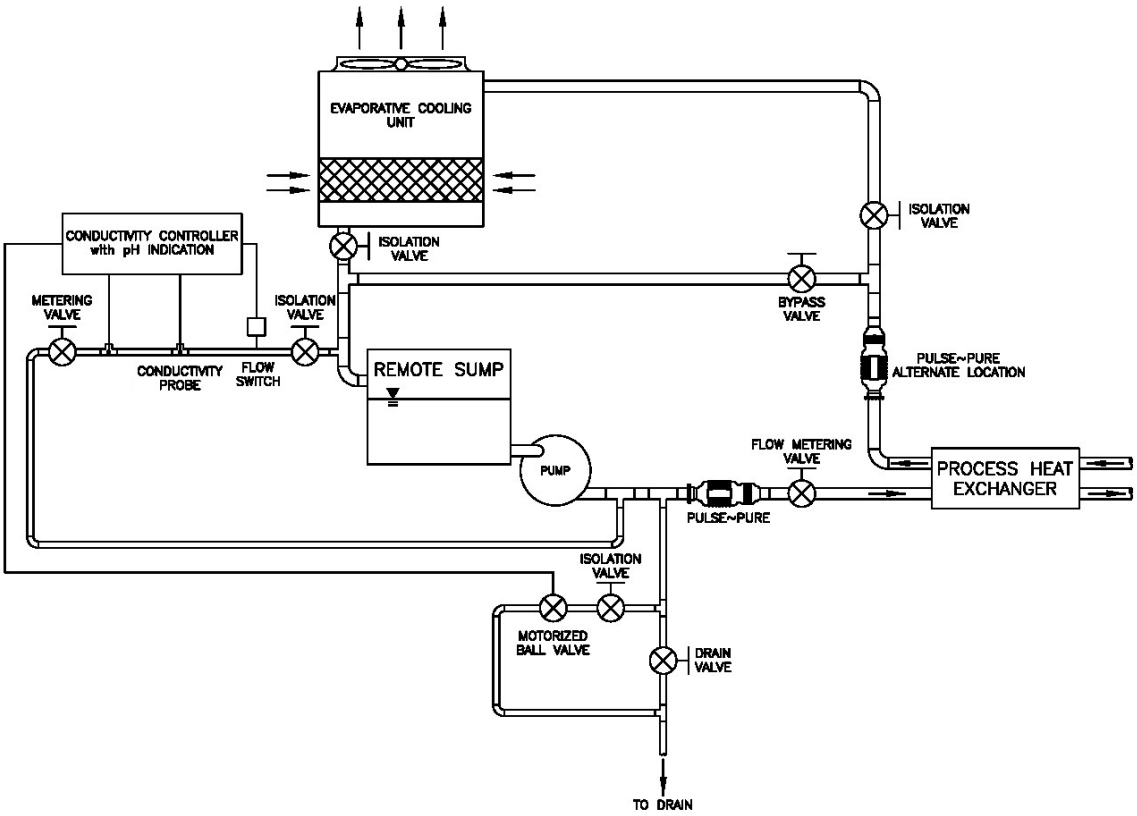

Figure 23. General field installed arrangement of the *Pulse*~Pure® system in a system with a single evaporative cooling unit with remote sump.

Installations Involving Multiple Evaporative Cooling Units

Systems containing multiple evaporative cooling units can be equipped with one or more *Pulse*~Pure® systems. **Figure 24** shows a process cooling system with three evaporative cooling units and one *Pulse*~Pure® for the entire system, while **Figure 25** shows one *Pulse*~Pure® per evaporative cooling unit for the same system.

In **Figure 24**, the **Purification Chamber** is located where all the water in the system is treated regardless of which pump is ON. In this installation, the *Pulse*~Pure® system should be wired to operate if any of the system pumps turn ON.

Figure 25 shows a system in which each subsystem, or evaporative cooling unit, has a dedicated *Pulse*~Pure® system. For this setup, each device could be wired to operate when the corresponding valve on the tower inlet is opened. This could be accomplished by using an electronic valve with an auxiliary contact or by installing a flow switch on the line.

It is important to note the location of the recirculation line for the conductivity controller. The location indicated in both figures ensures that the water flowing past the probes is a representative sample of the water flowing in the system regardless of which tower is operating. Placing the conductivity controller in a location that is not indicative of the systems water chemistry could result in several problems including poor performance from the *Pulse*~Pure® system.

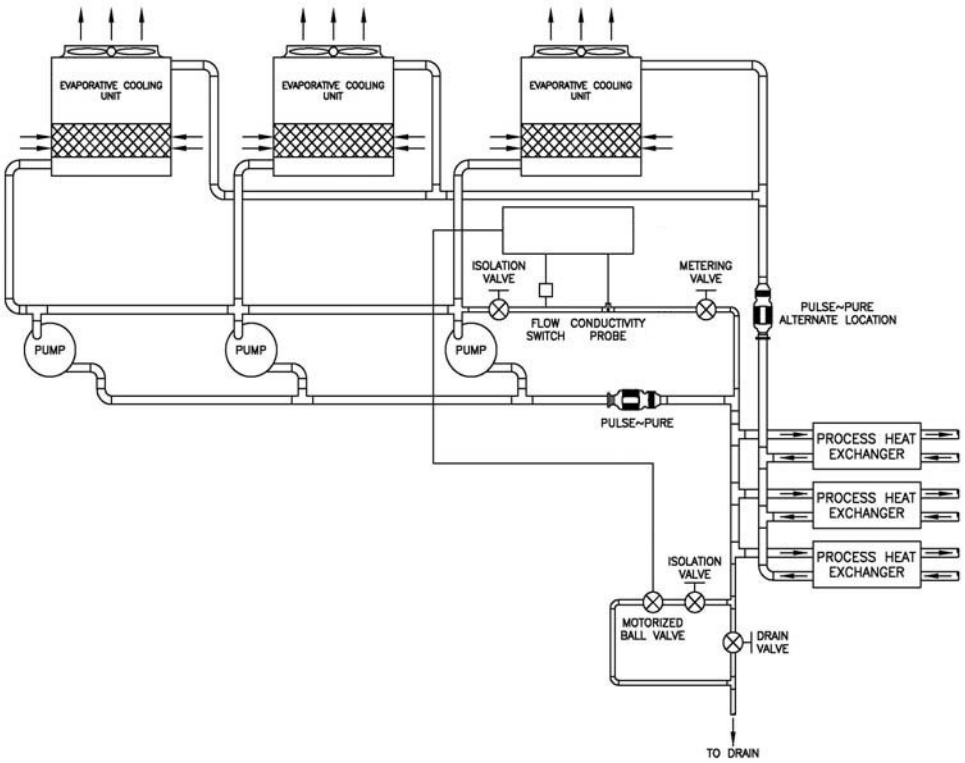

Figure 24. General field installed arrangement of a single Pulse~Pure® system in a system with multiple evaporative cooling units.

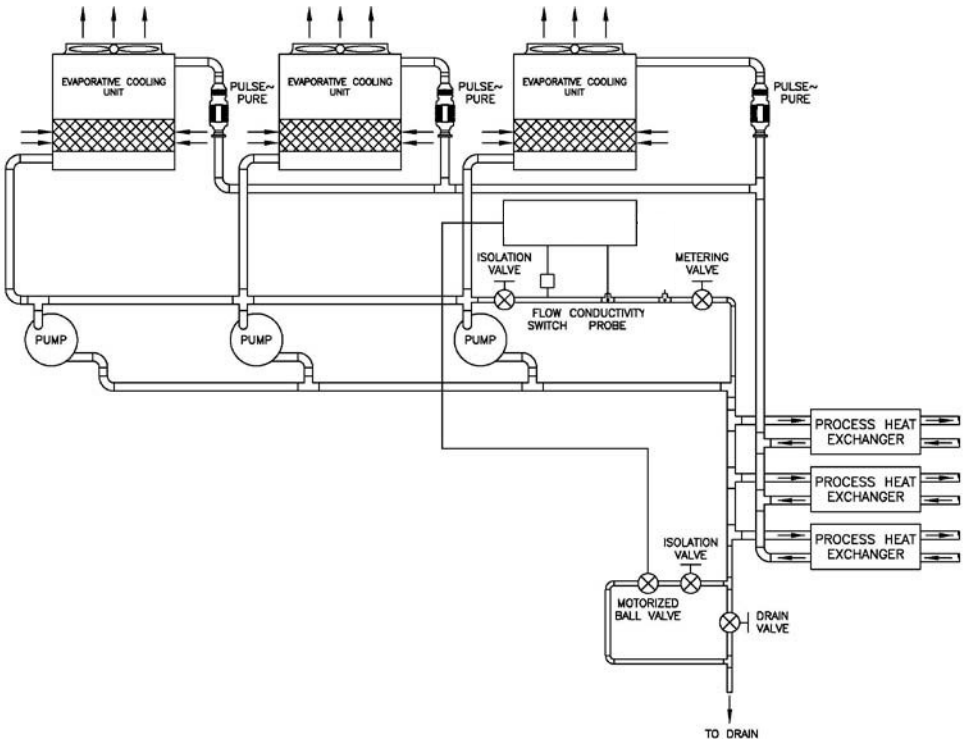

Figure 25. General field installed arrangement showing multiple evaporative cooling units each with a dedicated Pulse~Pure® system.

GENERAL INSTALLATION RECOMMENDATIONS

Below are a set of “best practices” recommended to achieve a successful installation of electronic components. Electronic devices are sensitive to Radio Frequency Interference (RFI), Electro Magnetic Interference (EMI) and Ground Fault Currents (GFC). Therefore, it is imperative to observe the following recommendations:

Conduit

- Always use the pre-punched conduit access holes supplied by the manufacturer. The manufacturer selected these locations as the best place to bring wire into the panel with the least interference to the electronics.
- If pre-punched holes are not the correct size enlarge with a punch.
- Never run conduit into the top of an electronic control panel. Conduit can condense the moisture in the air and drip water on the circuit boards inside the panel. Standard conduit connections are not water proof; rain or spilled liquid on top of the enclosure will drain into the control panel and damage the circuit boards.
- Never drill into a *Pulse*~Pure®Panel.

Voltage Source

- The voltage source should be separate from other equipment.
- Powering the control panel from its own control transformer is recommended.
- Control transformer secondary neutral wire must be grounded per NEC code.
- Don’t “daisy-chain” power feeds to multiple control panels. Each control panel should have a separate run from the source to the control panel. Daisy-chaining causes large EMI and voltage drops to the end panel.

Wiring

- Always use the recommended wire size or larger. Never reduce the wire size, since smaller than recommended wire causes voltage drops.
- Don’t mix wires with different voltages. An example would be a control panel with 460 volt wiring, 120 volt wiring and control wiring. Each voltage level must be separate inside the control panel and run through separate conduit. In this case, there would be three conduits each with their respective voltage levels. 460 volt wires cannot be run with 120 volt wires or control wires. 120 volt wires cannot be run with control wires.
- Wire trays must have dividers and solid bottoms to shield magnetic fields from different voltage wires. Always separate different voltage wires in the wire tray with dividers.
- Don’t run wires through a control panel that are not associated with the control panel. In other words, don’t use the control panel as a junction box for other circuits.
- Always run a continuous copper ground from the source to the control panel ground lug. Conduit grounds are not acceptable for electronic devices.
- Keep all wires as far away from circuit boards as possible inside the control panel. Never allow wires to lay on the circuit board.

Miscellaneous

- Don’t install relays, timers, etc., without checking with EVAPCO Water Systems.
- Read the instruction manual.
- If you’re not sure, call EVAPCO Water Systems.

TROUBLESHOOTING

Typically, problems with the operation of the *Pulse*~Pure® system can be resolved by referring to the troubleshooting chart below in Table 6. However, if consulting Table 6 does not result in a solution to the problem or if the issue is intermittent, please call your local EVAPCO Factory Authorized Water Treatment Partner for assistance.

Table 6 Troubleshooting Chart

Issue	Possible Cause	Remedy
LIGHTS ON PANEL DO NOT ILLUMINATE	Supply power may not be properly wired. Disconnect or circuit breaker on supply power may not in the ON position.	• Disconnect power from the device and then check that each supply power wire is properly connected to the correct terminal with the correct polarity. • Check that all circuit breakers upstream and downstream of the power terminals in the panel are in the ON position, including those in the panel. • Make sure disconnect on the front of the panel is in the ON position and is correctly latching.
UNIT STAYS IN STANDBY MODE	X1 Control Contact not closed RS-485 communication problem	• Check the integrity of connections to the X1 Control Contact terminals in the panel and at auxiliary contact terminals. • Check the integrity of wire used to connect auxiliary contact to X1 Control Contact. • Confirm that auxiliary contact is working properly by measuring continuity across the circuit when the pump is operating. • Ensure that a jumper is located on the "JP2" terminals – activating RS-485 control. •Ensure that the X1 Control Contact is jumpered. • Confirm whether a jumper is required on the "JP1" terminals – RS-485 terminate. • Check the integrity of connections to the RS-485 terminals in the panel and at remote device. • Check the integrity of wire used to connect RS-485 terminals to the remote device.
FAULT LIGHT IS ILLUMINATED	Cable is not properly connected The **Purification Chamber** and **Pulse Panel** are not compatible. Circuit board failure Defective fuse or Power surge or Lightning strike Moisture infiltration to the electronics or Defective wire or cable or Short circuit	• Check if cable is connected. If so, disconnect cable and then re-connect the plug to the receptacle. • Check that the model numbers on the Purification Chamber and Pulse Panel are the same. Units with mismatched model numbers are not compatible. • Call your local EVAPCO representative or EVAPCO Water Systems. • Check fuses for continuity and replace if necessary. Contact EVAPCO Water Systems if fuse repeatedly fails. • Call your local EVAPCO representative or EVAPCO Water Systems.
DIAGNOSTIC LAMP LED-8	LED-8 blinks once LED-8 blinks twice LED-8 blinks three times	• Fault is due to a problem with the High Frequency circuit only. • Fault is due to a problem with the Low Frequency circuit only. • Fault is due to a problem with the High Frequency and the Low Frequency circuits. • Call your local EVAPCO representative or EVAPCO Water Systems

*EVAPCO® Standard Express Warranty for Pulse~*Pure®
One Year Total Product Including Options and Accessories

EXPRESS WARRANTY

EVAPCO warrants all components of the *Pulse*~Pure® Water Treatment System against failure caused by defects in materials and workmanship for a period of twelve (12) months from the date installation is completed in accordance with good engineering practices or eighteen (18) months from the date of shipment, whichever occurs first. Included in this warranty are the electrical Pulse Panel, shielded cable, Purification Chamber and Optional equipment, if purchased as part of the *Pulse*~Pure® system, including conductivity controllers, conductivity probes, and motorized blowdown valves. All defective parts to be repaired or replaced shall be delivered to EVAPCO, shipping prepaid, with return shipment to the Buyer by EVAPCO to be made F.O.B. the factory, shipping prepaid by the Buyer.

In addition to the product warranty, EVAPCO also warrants that after system start up, the *Pulse*~Pure® Water Treatment System will maintain a total bacteria count of 10,000 CFU/ml or less during periods of operation with water flowing through the *Pulse*~Pure® device. This biological control warranty is predicated upon customer purchasing an annual monitoring service agreement from a factory trained or factory authorized agent.

The product and biological control warranties are predicated on system operation and maintenance in accordance with EVAPCO's recommended operation and maintenance procedures. Failure to follow EVAPCO's recommended operation and maintenance procedures will void these warranties. **Labor costs associated with any repair work performed under the terms of the warranties are NOT included within the warranty.**

The Buyer assumes responsibility for compliance with any regulations, codes, standards or ordinances applicable to the installation, location, operation or maintenance of the products. No person, agent, or dealer is authorized to enlarge upon the warranties set out herein or the obligations of EVAPCO hereunder.

LIMITATION OF LIABILITY

THE SOLE REMEDY FOR BREACH OF THE EXPRESS WARRANTIES DESCRIBED HEREIN SHALL BE REPAIR OR REPLACEMENT OF THE EQUIPMENT BY EVAPCO, OR REFUNDING THE PURCHASE PRICE FOR THE *PULSE*~PURE®WATER TREATMENT SYSTEM SET FORTH ON THE PURCHASE ORDER LESS STARTUP AND MONITORING FEES. IT SHALL BE IN EVAPCO'S SOLE DISCRETION AS TO WHETHER REPAIR, REPLACEMENT OR REFUND IS THE OFFERED REMEDY. IF EVAPCO DECIDES TO MAKE REPAIRS, EVAPCO HAS THE OPTION OF COMPLETING ALL NECESSARY REPAIRS ITSELF, OR AUTHORIZING A THIRD PARTY TO PERFORM SUCH REPAIRS AT EVAPCO'S EXPENSE. EVAPCO IS NOT RESPONSIBLE FOR ANY REPAIR WORK PERFORMED BY A THIRD PARTY THAT EVAPCO DID NOT PRE-APPROVE IN WRITING. NOTWITHSTANDING ANYTHING ELSE IN THIS DOCUMENT, EVAPCO'S LIABILITY OF ANY KIND WHATSOEVER SHALL NOT EXCEED THE PURCHASE PRICE FOR THE *PULSE*~PURE® SET FORTH ON THE PURCHASE ORDER. UNDER NO CIRCUMSTANCES SHALL EVAPCO BE LIABLE FOR LOST PROFITS, LOST SAVINGS, PERSONAL INJURIES, INCIDENTAL DAMAGES, ECONOMIC LOSS, PROPERTY DAMAGE, OR ANY OTHER CONSEQUENTIAL, INDIRECT, INCIDENTAL, OR PUNITIVE DAMAGES, EVEN IF EVAPCO HAS BEEN ADVISED OF THE POSSIBILITY OF SUCH DAMAGES, INCLUDING WITHOUT LIMITATION ANY DAMAGES CAUSED TO THE COOLING OR REFRIGERATION SYSTEM AS A WHOLE OR ANY INDIVIDUAL COMPONENTS THEREOF. In addition, EVAPCO shall not be responsible for any injuries or damages of any kind whatsoever under any theory of tort to the extent the injuries or damage are caused by misuse of the product by buyer or any third party.

DISCLAIMER OF IMPLIED WARRANTIES

OTHER THAN THE EXPRESS MANUFACTURER'S WARRANTY DESCRIBED HEREIN, THE UNIT IS SOLD "AS IS" AND THERE ARE NO OTHER WARRANTIES. EVAPCO HEREBY DISCLAIMS AND EXCLUDES ALL IMPLIED WARRANTIES OF ANY KIND WHATSOEVER, INCLUDING WITHOUT LIMITATION WARRANTIES OF MERCHANTABILITY, THAT THE UNIT IS FIT FOR A PARTICULAR USE OR PURPOSE, THAT THE UNIT IS FIT FOR A PARTICULAR APPLICATION OR ENVIRONMENT, AND ANY WARRANTIES THAT MIGHT OTHERWISE ARISE OUT OF A COURSE OF DEALING BETWEEN THE PARTIES OR USAGE OF TRADE.

APPENDIX A: MODBUS COMMUNICATION

The EVAPCO *Pulse*~Pure® Microprocessor Control utilizes a communications format, based on Modbus protocol, to interface to supervisory control systems. The physical interface is RS-485 which utilizes Modbus RTU protocol. To enable the Modbus protocol, the X1 Control Contact must be jumpered or connected to a flow switch or pump auxiliary contact.

The following pages will describe the communications functionality and the "code sets" related to the data and set-points within the *Pulse*~Pure® Microprocessor.

Communications Settings:

- The communications protocol is MODBUS-RTU over RS-485. This screen selects the device address on the network for this panel. Device address range is 0 to 15.
- Only one address can be accessed at a time. There is no block read/write.
- Selecting the device address:
  - With the power on, switch the control input on and off three times within the first five seconds.
  - The unit enters the set-up mode and flashes the yellow "Standby" lamp rapidly three times, then flashes the count for the MODBUS address on the green "Operating" lamp.
  - When the flashing stops, you have 5 seconds to toggle the control input.
  - If the control input is toggled, the MODBUS address will increment by one count and the unit will flash the yellow "Standby" lamp rapidly three times, then flash the new MODBUS address on the green "Operating" lamp.
  - Turning the power off within five seconds after the new MODBUS address is displayed will save the new address.
  - The above process can be repeated until the desired MODBUS address is obtained.
  - If the power is not turned off within 5 seconds after the new MODBUS address, the old address will be retained and the unit will resume normal operation.
  - Baud Rate – Selects the data transfer rate.
    - 9600 baud.
  - Data bits – Selects the number of data bits.
    - 8 bits.
  - Parity – Error checking based on parity.
    - None
  - Stop Bits – Number of stop bits.
    - 1

Digital I/O (Read Only)

Modbus Address	Description	TYPE	VALUE
43001	Control	Input	0 = Standby 1 = Run
43002	Fault	Output	0 = Normal 1 = Fault
43003	Power Coil	Output	0 = Off 1 = On
43004	Hi Freq Coil	Output	0 = Off 1 = On
43005	Blinking Lights (on coil)	Output	0 = Off 1 = On
43006	Operating lamp	Output	0 = Off 1 = On
43007	Fault lamp	Output	0 = Off 1 = On
43008	Standby lamp	Output	0 = Off 1 = On
43009	Remote-I/O Jumper	Input	0 = Off (Control input) 1 = On (RS-485)
43010	Current Range Jumper	Input	0 = Off (9 amps) 1 = On (23 amps)
43011	LED Direction Jumper (Blinking Lights on /Coil)	Input	0 = Off (Common Cathode) Default 1 = On (Common Anode)
43012	Future		0 = Off 1 = On
43013	Future		0 = Off 1 = On
43014	Future		0 = Off 1 = On
43015	Future		0 = Off 1 = On
43016	Future		0 = Off 1 = On

Analog I/O (Read Only)

Modbus Address	Description	TYPE	VALUE	RANGE
43017	Power coil current	Input	7/22 Amps	0-40 Amps
43018	Hi Frequency Coil	Output	30 Khz	0-40Kz
43019	Future			
43020	Future			
43021	Future			
43022	Future			
43023	Future			
43024	Future			
43025	Future			
43026	Future			

Status

Modbus Address	Description	TYPE	VALUE	RANGE
43027	Future	Read Only		
43028	Future	Read Only		
43029	Future	Read Only		
43030	Future	Read Only		
43031	Future	Read Only		
43032	Future	Read Only		

Set Points (Read / Write) and (Read Only)

Modbus Address	Description	TYPE	VALUE	RANGE
43033	Remote On	Read/Write	0=Off 1=On	*
43034	9A Hi current	Read Only	13	0-40 Amps
43035	9A Lo current	Read Only	4	0-40 Amps
43036	23A Hi current	Read Only	28	0-40 Amps
43037	23A Lo current	Read Only	10	0-40 Amps
43038	Future	Read/Write		
43039	Future	Read/Write		
43040	Future	Read/Write		
43041	Future	Read/Write		
43042	Future	Read/Write		
43043	Future	Read/Write		
43044	Future	Read/Write		
43045	Future	Read/Write		
43046	Future	Read/Write		
43047	Future	Read/Write		
43048	Future	Read/Write		
43049	Future	Read/Write		

43050	Future	Read/Write		
43051	Future	Read/Write		
43052	Future	Read/Write		
43053	Future	Read/Write		
43054	Future	Read/Write		
43055	Future	Read/Write		
43056	Future	Read/Write		

* The “Control” input must be energized in order for the remote control via RS-485 to operate. If the control input is de-energized, remote control via RS-485 is disabled.

Downloading Data from EVAPCO Controller (ECC-2) or EVAPCO Integrated Controller (PPIC-2)

1. Place a USB flash drive into the USB port on the bottom (PPIC-2) or front right corner (ECC-2)of the controller.

2. Navigate to the File Utilities menu of the controller

   a. Select the Menu Icon to display the Menu Screen
   b. From the Menu Screen, select the Configuration Icon
   c. From the Configuration Screen select “File Utilities”
   d. A USB port is located on the bottom panel of the PPIC-2. Open protective cover as shown in **Figure 26**.

Figure 3. USB Port with Protective Cover Open

   e. Insert USB Stick into port. USB label faces towards user.
   f. Select the Page Down Arrow Icon on the Configuration Screen to scroll down until “Export Data Log File” is located.
   g. Select “Export Data Log File”.
   h. Screen displays “Confirm data log export to USB?”. Select the Check Icon
   i. Screen displays “Export in Progress” and will automatically download the data log file.
   j. Screen displays “Export Successful” when file download is complete.

k. Select the Check Icon ✓ to return to the “File Utilities” Menu.

l. Repeat steps f. through j. above to download the Event Log and System Log.

m. Select the Check Icon ✓.

n. Remove USB stick and replace USB cover over port. The USB cover must be seated over the USB port to ensure weather-tight connection

o. Select the Menu Icon to display the Menu Screen.

p. Select the Home Icon to return to the Home Screen.

3. All three files (Data Log, Event Log, and System Log) must be downloaded.

4. The files will have the following file names:

   a. Data Log: “datalog <date> <time>.csv”
   b. Event Log: “eventlog <date> <time>.txt”
   c. System Log: “systemlog <date> <time>.txt”

APPENDIX B: SAFETY STANDARDS

FCC

This equipment has been verified as complying with FCC requirements for electromagnetic emissions of Title 47 CFR part 18 for Industrial, Scientific and Medical Equipment.

This equipment generates and uses radio frequency energy. If not installed and used properly, in strict accordance with the manufacturer's instructions, it may cause interference to radio communications.

FIFRA

This equipment complies with EPA requirements for Pesticide Programs of Title 40 CFR Subchapter E.

NATIONALLY RECOGNIZED TESTING LABORATORIES

This equipment is constructed in conformance with UL guidelines. This equipment meets both UL and cUL requirements.

HARMONIC DISTORTION

The *Pulse*~Pure® system has been designed as an electrically efficient system and creates minimal Total Harmonic Distortion (THD).

Declaration of Conformity
Pulse~Pure Water Treatment Device

Manufacturer: Evapco, Inc
5151 Allendale Lane
Taneytown, Maryland, USA 21787

Model: Pulse~Pure® Models: P-3, P-4, P-6, P-8, P-10, P-12, P-14,P-16

Type of Equipment: Non-chemical Water Treatment Device

This equipment complies with the essential requirements of the following directives:

EMC Directive	(89/336/EC)
Low Voltage Directive	(2006/95/EC) (formerly 73/223/EEC)

This equipment conforms to the following product specifications:

EN55011:1999/A2:2002 ISM Radio Disturbance Characteristics
EN61000-6-3:2001 EMC Emission Standard
EN61000-3-2-1995 EMC Harmonic Current Emissions
EN61000-3-3-199e EMC Voltage Fluctuations and Flicker
IEC60204-1:1997+A1:1999 – Electric Safety

Year CE mark first affixed - 2007

Manufacturer Authorized Representative

John W. Lane
Vice President Water Systems Engineering
Taneytown, Maryland USA April 16, 2009

EVAPCO, Inc.
World Headquarters
PO Box 1300
Westminster, MD 21158
410-756-2600
www.evapco.com

© EVAPCO, INC., 2018
All Rights Reserved